RECORD DRAWING

THESE RECORD DRAWINGS HAVE BEEN PREPARED, IN PART, ON THE BASIS OF INFORMATION COMPILED AND FURNISHED BY THE PROJECT CONTRACTOR AND OTHERS. THE ENGINEER WILL NOT BE RESPONSIBLE FOR ANY ERRORS OR OMISSIONS WHICH HAVE BEEN INCORPORATED INTO THIS DOCUMENT AS A RESULT. FIELD VERIFICATION OF FACTS AND DATA SHOULD BE MADE IF THESE DOCUMENTS ARE TO BE USED AS A BASIS FOR FUTURE WORK.

HUMBOLDT COUNTY RESOURCE CONSERVATION DISTRICT

SALT RIVER ECOSYSTEM RESTORATION PROJECT

SALT RIVER CHANNEL & RIPARIAN FLOODPLAIN CORRIDOR RESTORATION PLANS

2018 CONSTRUCTION

JUNE 2018

PREPARED BY

GHD

Michael Love & Associates

U.S. FISH & WILDLIFE SERVICE

AREA MAP

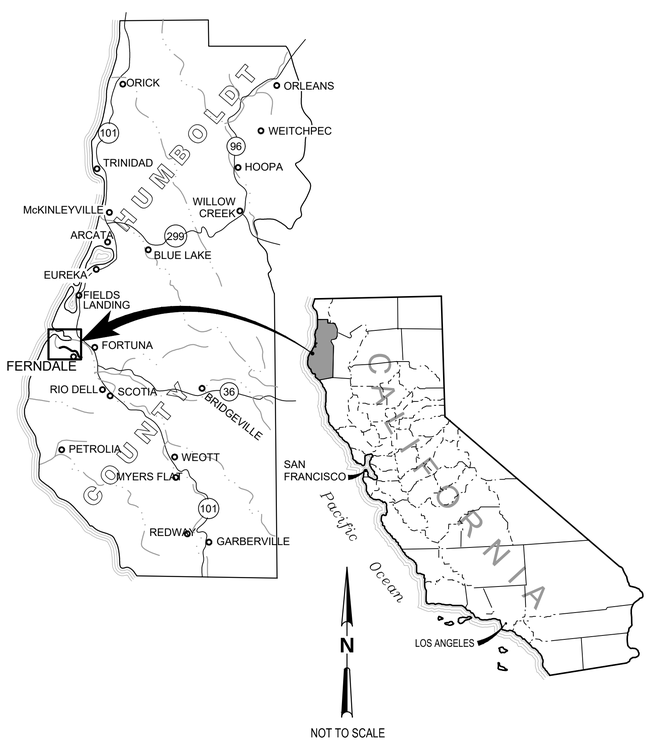

LOCATION MAP

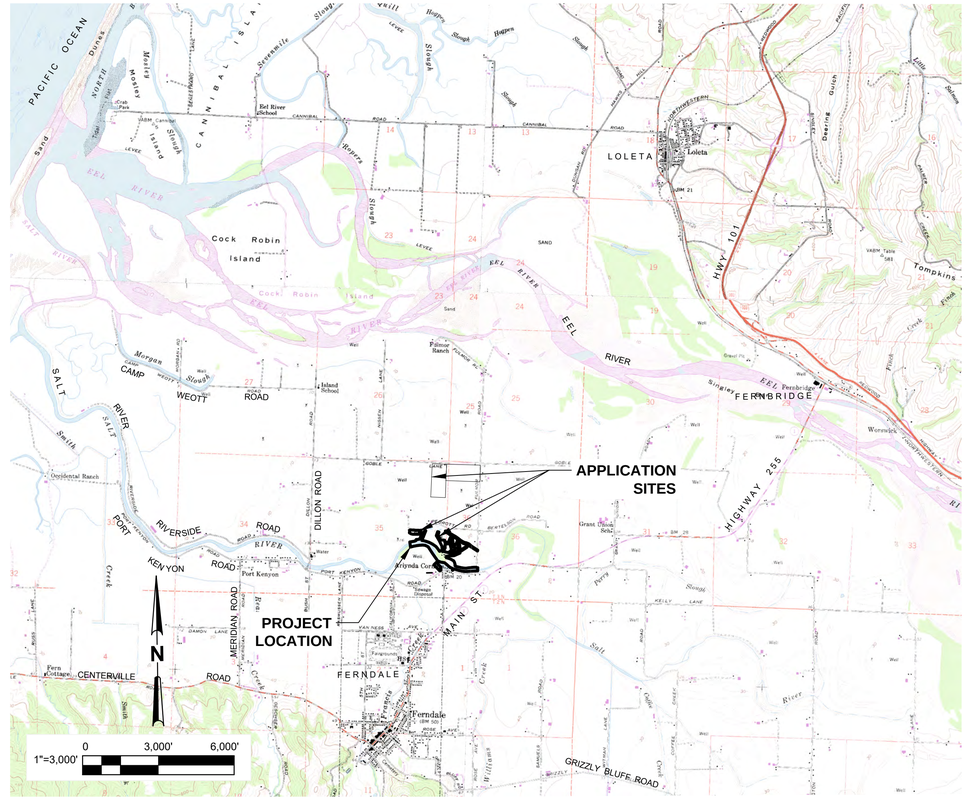

PROJECT COLLABORATORS

CALIFORNIA DEPARTMENT OF FISH & WILDLIFE

CALIFORNIA STATE COASTAL CONSERVANCY

CALIFORNIA DEPARTMENT OF WATER RESOURCES

CALIFORNIA OCEAN PROTECTION COUNCIL

CITY OF FERNDALE

COUNTY OF HUMBOLDT

NOAA - NATIONAL MARINE FISHERIES SERVICE

SALT RIVER WATERSHED COUNCIL

USDA - NATURAL RESOURCES CONSERVATION SERVICE

WILDLIFE CONSERVATION BOARD

ENGINEER: GHD INC

JEREMY SVEHLA PE, PROJECT MANAGER

APPROVAL: SIGNED 6-20-18 DATE

REGISTERED PROFESSIONAL ENGINEER JEREMY SHANE SVEHLA No. C 72169 CIVIL STATE OF CALIFORNIA

STEVE ALLEN PE, PROJECT PRINCIPAL

APPROVAL: SIGNED 6-20-18 DATE

REGISTERED PROFESSIONAL ENGINEER STEVEN A. ALLEN No. 62021 CIVIL STATE OF CALIFORNIA

GHD Inc.
718 Third Street Eureka California 95501 USA
T 1 707 443 8326 F 1 707 444 8330
W www.ghd.com

REGISTERED PROFESSIONAL ENGINEER JEREMY SHANE SVEHLA No. C 72169 CIVIL STATE OF CALIFORNIA

BAR IS ONE INCH ON ORIGINAL DRAWING 0 1"

REUSE OF DOCUMENTS
This document and the ideas and designs incorporated herein, as an instrument of professional service, is the property of GHD Inc. and shall not be reused in whole or in part for any other project without GHD Inc.'s written authorization. © GHD Inc. 2014

MARK	DATE	DESCRIPTION
A	20181217	RECORD DRAWING REVISIONS
	06/20/2018	ISSUE FOR BID

ISSUE

HUMBOLDT COUNTY RESOURCE CONSERVATION DISTRICT

SALT RIVER ECOSYSTEM RESTORATION PROJECT

COVER SHEET

PROJ NO: 10653-8410410

DRWN: B. BYRD CHKD: JS/SA

G-1

SHEET 1 OF 53

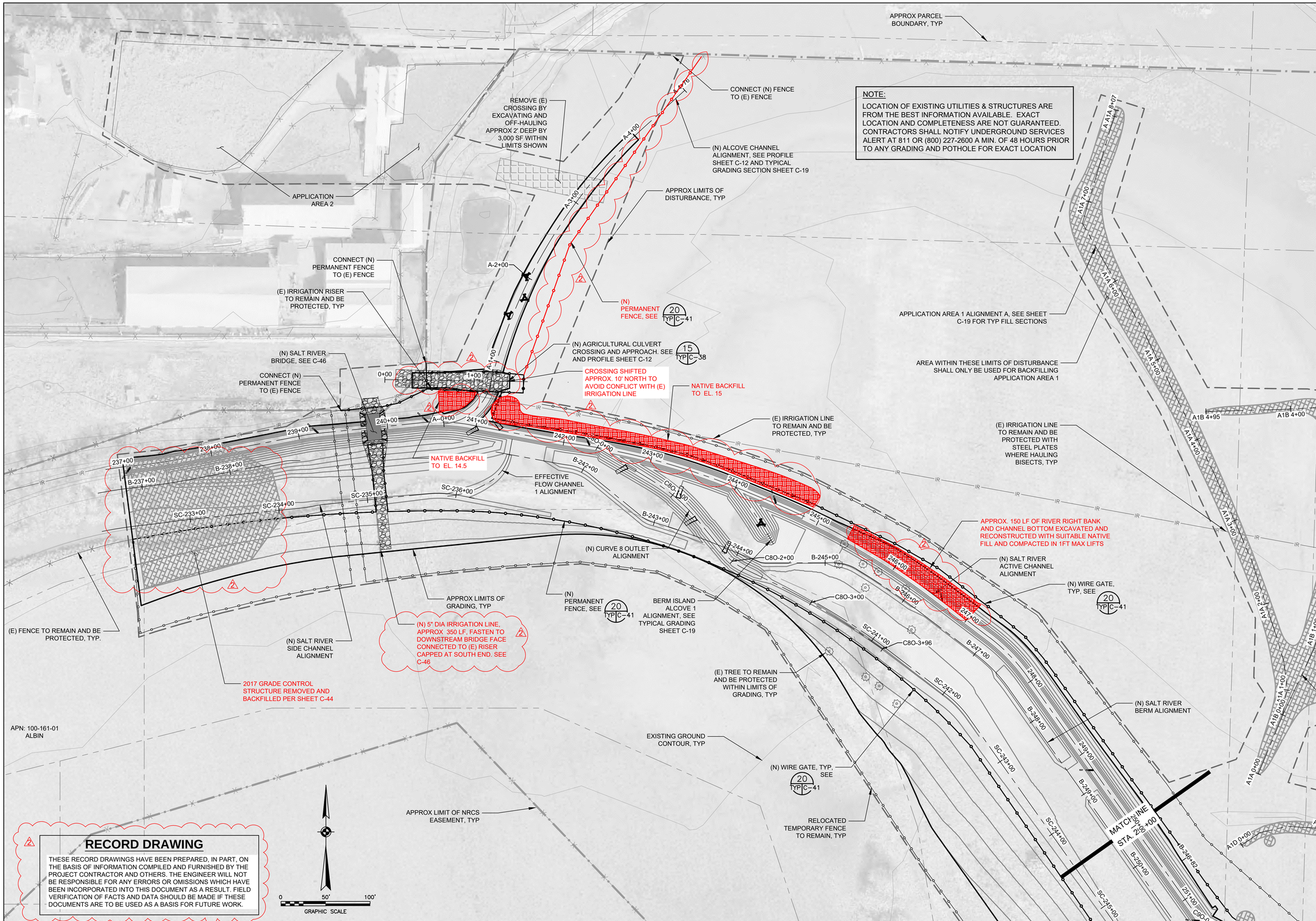

NOTE:

LOCATION OF EXISTING UTILITIES & STRUCTURES ARE FROM THE BEST INFORMATION AVAILABLE. EXACT LOCATION AND COMPLETENESS ARE NOT GUARANTEED. CONTRACTORS SHALL NOTIFY UNDERGROUND SERVICES ALERT AT 811 OR (800) 227-2600 A MIN. OF 48 HOURS PRIOR TO ANY GRADING AND POTHOLE FOR EXACT LOCATION

RECORD DRAWING

THESE RECORD DRAWINGS HAVE BEEN PREPARED, IN PART, ON THE BASIS OF INFORMATION COMPILED AND FURNISHED BY THE PROJECT CONTRACTOR AND OTHERS. THE ENGINEER WILL NOT BE RESPONSIBLE FOR ANY ERRORS OR OMISSIONS WHICH HAVE BEEN INCORPORATED INTO THIS DOCUMENT AS A RESULT. FIELD VERIFICATION OF FACTS AND DATA SHOULD BE MADE IF THESE DOCUMENTS ARE TO BE USED AS A BASIS FOR FUTURE WORK.

GHD Inc.
718 Third Street Eureka California 95501 USA
T 1 707 443 8326 F 1 707 444 8330
W www.ghd.com

REGISTERED PROFESSIONAL ENGINEER JEREMY SHANE SYEHLA C 72169 CIVIL STATE OF CALIFORNIA

BAR IS ONE INCH ON ORIGINAL DRAWING
0 1"

REUSE OF DOCUMENTS
This document and the ideas and designs incorporated herein, as an instrument of professional service, is the property of GHD Inc. and shall not be reused in whole or in part for any other project without GHD Inc.'s written authorization. © GHD Inc. 2014

MARK	DATE	DESCRIPTION
2	20181217	RECORD DRAWING REVISIONS
	06/02/018	ISSUE FOR BID

ISSUE

HUMBOLDT COUNTY RESOURCE CONSERVATION DISTRICT

SALT RIVER ECOSYSTEM RESTORATION PROJECT

SITE PLAN 1 OF 4

PROJ NO: 10653-8410410

DRWN: B. BYRD CHKD: JS/SA

C-8

SHEET 13 OF 53

Plot Date: 17 December 2018 - 9:59 AM Plotted By: Brendan Byrd

Cad File No: G:\Legacy\Projects\10653 HumCoResourceConservationDist\8410410 Salt River Final Design\06-CAD\Sheets\1065310003_E1_SitePlanSheets.dwg

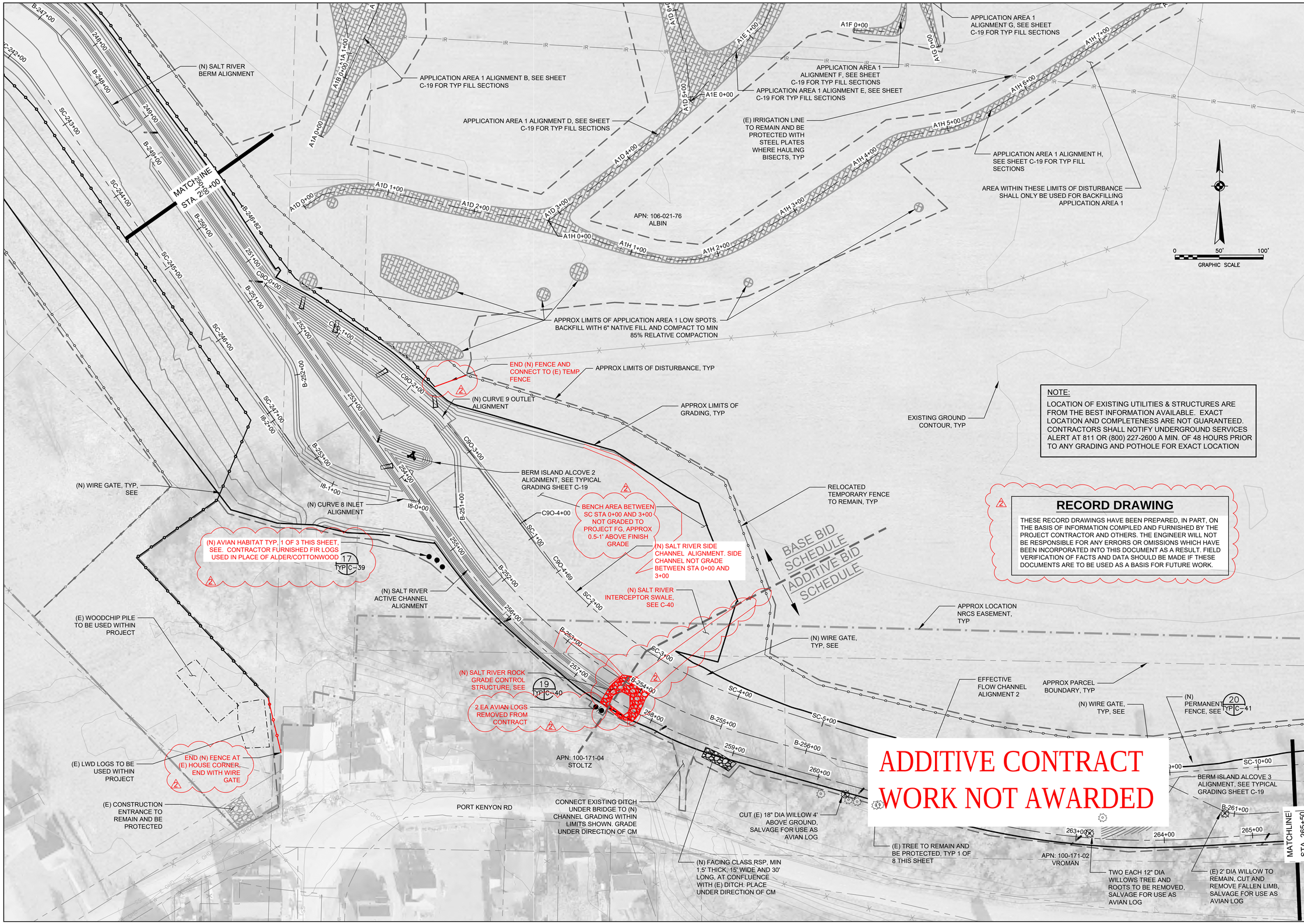

NOTE:

LOCATION OF EXISTING UTILITIES & STRUCTURES ARE FROM THE BEST INFORMATION AVAILABLE. EXACT LOCATION AND COMPLETENESS ARE NOT GUARANTEED. CONTRACTORS SHALL NOTIFY UNDERGROUND SERVICES ALERT AT 811 OR (800) 227-2600 A MIN. OF 48 HOURS PRIOR TO ANY GRADING AND POTHOLE FOR EXACT LOCATION

RECORD DRAWING

THESE RECORD DRAWINGS HAVE BEEN PREPARED, IN PART, ON THE BASIS OF INFORMATION COMPILED AND FURNISHED BY THE PROJECT CONTRACTOR AND OTHERS. THE ENGINEER WILL NOT BE RESPONSIBLE FOR ANY ERRORS OR OMISSIONS WHICH HAVE BEEN INCORPORATED INTO THIS DOCUMENT AS A RESULT. FIELD VERIFICATION OF FACTS AND DATA SHOULD BE MADE IF THESE DOCUMENTS ARE TO BE USED AS A BASIS FOR FUTURE WORK.

GHD Inc.
718 Third Street Eureka California 95501 USA
T 1 707 443 8326 F 1 707 444 8330
W www.ghd.com

REGISTERED PROFESSIONAL ENGINEER JEREMY SHANE SYEHLA CIVIL STATE OF CALIFORNIA

BAR IS ONE INCH ON ORIGINAL DRAWING 0 1"

REUSE OF DOCUMENTS
This document and the ideas and designs incorporated herein, as an instrument of professional service, is the property of GHD Inc. and shall not be reused in whole or in part for any other project without GHD Inc.'s written authorization. © GHD Inc. 2014

MARK	DATE	DESCRIPTION
2	2018/12/17	RECORD DRAWING REVISIONS
	06/20/2018	ISSUE FOR BID
		ISSUE

HUMBOLDT COUNTY RESOURCE CONSERVATION DISTRICT

SALT RIVER ECOSYSTEM RESTORATION PROJECT

SITE PLAN 2 OF 4

PROJ NO: 10653-8410410

DRWN: B. BYRD CHKD: JS/SA

C-9

SHEET 14 OF 53

NOTE:

LOCATION OF EXISTING UTILITIES & STRUCTURES ARE FROM THE BEST INFORMATION AVAILABLE. EXACT LOCATION AND COMPLETENESS ARE NOT GUARANTEED. CONTRACTORS SHALL NOTIFY UNDERGROUND SERVICES ALERT AT 811 OR (800) 227-2600 A MIN. OF 48 HOURS PRIOR TO ANY GRADING AND POTHOLE FOR EXACT LOCATION

13+00
14+00
15+00
15+06
IR
(N) FULMOR ROAD CULVERT DRAINAGE SWALE ALIGNMENT, SEE PROFILE SHEET C-12 & TYPICAL GRADING SECTION SHEET C-19
(E) CULVERT, FENCE, AND RSP TO REMAIN AND BE PROTECTED
FULMOR RD
APN: 106-021--77
ALBIN
EXISTING GROUND CONTOUR, TYP
APPROX LOCATION NRCS EASEMENT, TYP
(N) WIRE GATE, TYP, SEE 20 TYP C-41
APPROX LIMITS OF DISTURBANCE, TYP
(N) PERMANENT FENCE, SEE 20 TYP C-41
RELOCATED TEMPORARY FENCE TO REMAIN, TYP
(E) FENCE TO REMAIN AND BE PROTECTED, TYP.
(N) SALT RIVER SIDE CHANNEL ALIGNMENT
SC-11+00
SC-12+00
SC-13+00
(N) SALT RIVER BERM ALIGNMENT
(E) WILLOW TO REMAIN AND BE PROTECTED, TYP
B-262+00
B-263+00
B-264+00
266+00
267+00
268+00
MATCHLINE STA. 265+50
(E) 2' DIA WILLOW TREE AND ROOTS TO BE REMOVED, SALVAGE FOR USE AS AVIAN LOG
(N) SALT RIVER ACTIVE CHANNEL ALIGNMENT
PORT KENYON RD
STATE HIGHWAY 211
APPROX PARCEL BOUNDARY, TYP

ADDITIVE CONTRACT WORK NOT AWARDED

0 50' 100'
GRAPHIC SCALE

RECORD DRAWING

THESE RECORD DRAWINGS HAVE BEEN PREPARED, IN PART, ON THE BASIS OF INFORMATION COMPILED AND FURNISHED BY THE PROJECT CONTRACTOR AND OTHERS. THE ENGINEER WILL NOT BE RESPONSIBLE FOR ANY ERRORS OR OMISSIONS WHICH HAVE BEEN INCORPORATED INTO THIS DOCUMENT AS A RESULT. FIELD VERIFICATION OF FACTS AND DATA SHOULD BE MADE IF THESE DOCUMENTS ARE TO BE USED AS A BASIS FOR FUTURE WORK.

GHD Inc.
718 Third Street Eureka California 95501 USA
T 1 707 443 8326 F 1 707 444 8330
W www.ghd.com

REGISTERED PROFESSIONAL ENGINEER
JEREMY SHANE SYEHLA
No. C 72169
CIVIL
STATE OF CALIFORNIA

BAR IS ONE INCH ON ORIGINAL DRAWING
0 1"

REUSE OF DOCUMENTS
This document and the ideas and designs incorporated herein, as an instrument of professional service, is the property of GHD Inc. and shall not be reused in whole or in part for any other project without GHD Inc.'s written authorization. © GHD Inc. 2014

MARK	DATE	DESCRIPTION
2	2018/12/17	RECORD DRAWING REVISIONS
	06/20/2018	ISSUE FOR BID

ISSUE

HUMBOLDT COUNTY RESOURCE CONSERVATION DISTRICT

SALT RIVER ECOSYSTEM RESTORATION PROJECT

SITE PLAN 3 OF 4

PROJ NO: 10653-8410410

DRWN: B. BYRD CHKD: JS/SA

C-10

SHEET 15 OF 53

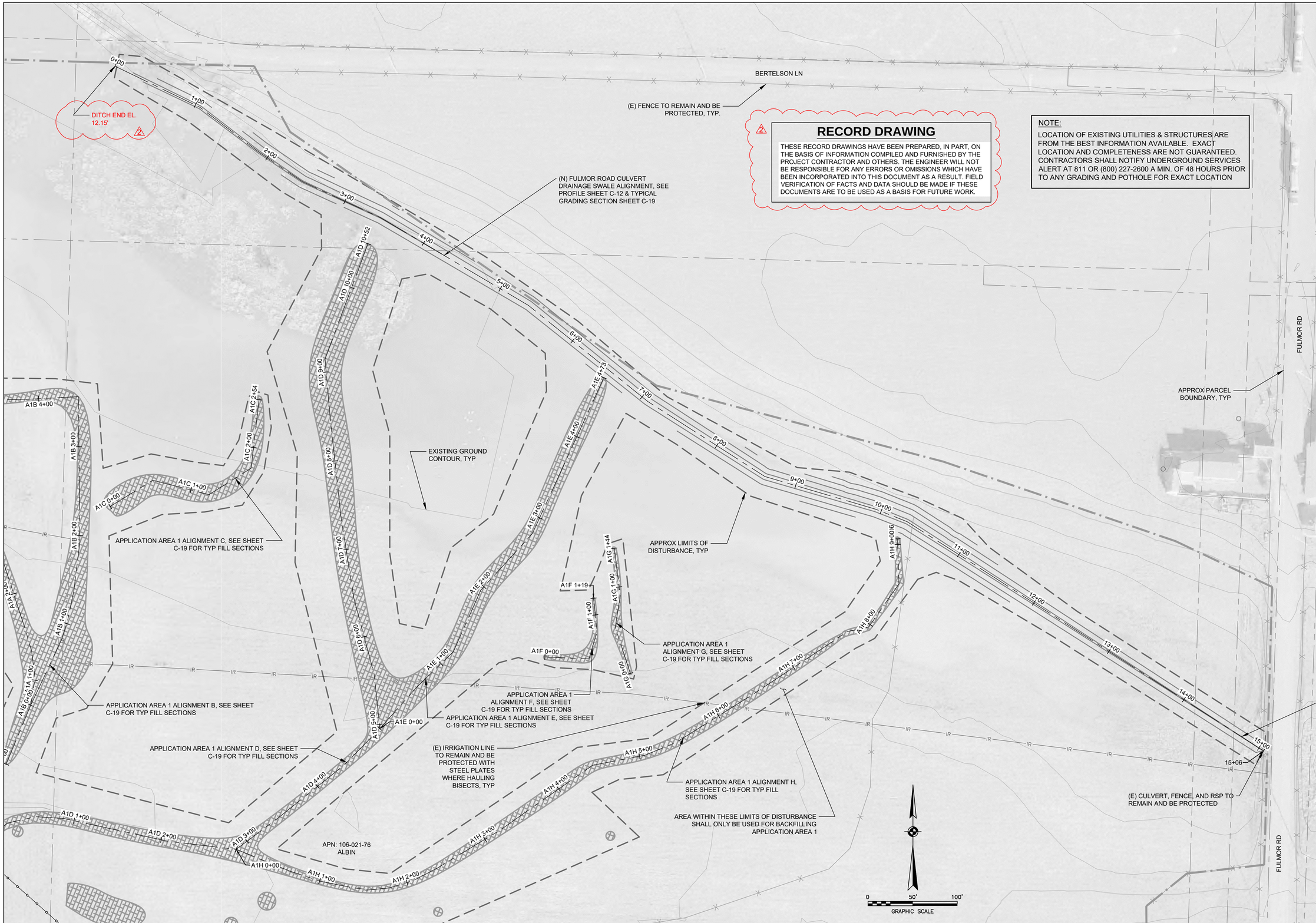

RECORD DRAWING

THESE RECORD DRAWINGS HAVE BEEN PREPARED, IN PART, ON THE BASIS OF INFORMATION COMPILED AND FURNISHED BY THE PROJECT CONTRACTOR AND OTHERS. THE ENGINEER WILL NOT BE RESPONSIBLE FOR ANY ERRORS OR OMISSIONS WHICH HAVE BEEN INCORPORATED INTO THIS DOCUMENT AS A RESULT. FIELD VERIFICATION OF FACTS AND DATA SHOULD BE MADE IF THESE DOCUMENTS ARE TO BE USED AS A BASIS FOR FUTURE WORK.

NOTE:

LOCATION OF EXISTING UTILITIES & STRUCTURES ARE FROM THE BEST INFORMATION AVAILABLE. EXACT LOCATION AND COMPLETENESS ARE NOT GUARANTEED. CONTRACTORS SHALL NOTIFY UNDERGROUND SERVICES ALERT AT 811 OR (800) 227-2600 A MIN. OF 48 HOURS PRIOR TO ANY GRADING AND POTHOLE FOR EXACT LOCATION

GHD Inc.
718 Third Street Eureka California 95501 USA
T 1 707 443 8326 F 1 707 444 8330
W www.ghd.com

REGISTERED PROFESSIONAL ENGINEER
JEREMY SHANE SYEHLA
No. C 72169
CIVIL
STATE OF CALIFORNIA

BAR IS ONE INCH ON ORIGINAL DRAWING
0 1"

REUSE OF DOCUMENTS
This document and the ideas and designs incorporated herein, as an instrument of professional service, is the property of GHD Inc. and shall not be reused in whole or in part for any other project without GHD Inc.'s written authorization. © GHD Inc. 2014

MARK	DATE	DESCRIPTION
2	2018/12/17	RECORD DRAWING REVISIONS
	06/20/2018	ISSUE FOR BID

ISSUE

HUMBOLDT COUNTY RESOURCE CONSERVATION DISTRICT

SALT RIVER ECOSYSTEM RESTORATION PROJECT

SITE PLAN 4 OF 4

PROJ NO: 10653-8410410

DRWN: B. BYRD CHKD: JS/SA

C-11

SHEET 16 OF 53

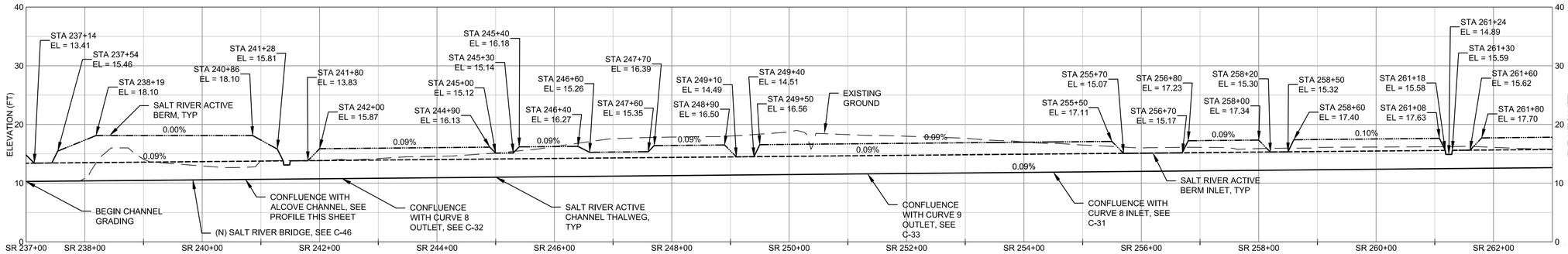

STA 262+00
MATCH LINE
SEE BELOW LEFT

PROFILE: SALT RIVER ACTIVE CHANNEL

VERTICAL EX.: 10:1

SCALE: 0 100' 200' HORIZONTAL SCALE; 0 10' 20' VERTICAL SCALE

STA 262+00
MATCH LINE
SEE ABOVE RIGHT

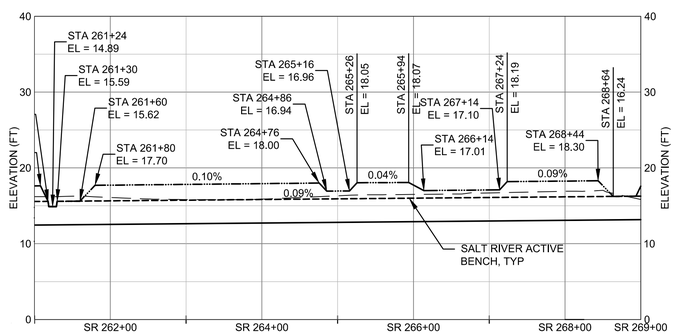

PROFILE: SALT RIVER ACTIVE CHANNEL

VERTICAL EX.: 10:1

SCALE: 0 100' 200' HORIZONTAL SCALE; 0 10' 20' VERTICAL SCALE

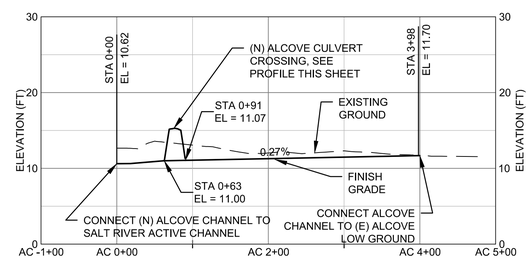

PROFILE: ALCOVE CHANNEL

VERTICAL EX.: 10:1

SCALE: 0 100' 200' HORIZONTAL SCALE; 0 10' 20' VERTICAL SCALE

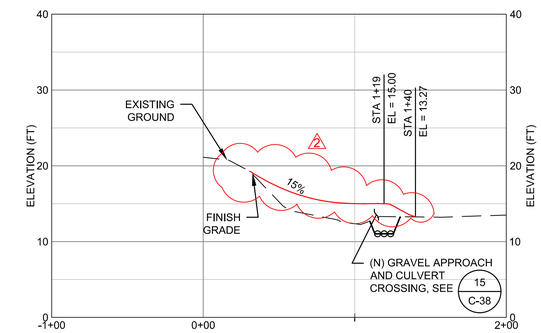

PROFILE: ALCOVE CULVERT CROSSING

VERTICAL EX.: 5:1

SCALE: 0 50' 100' HORIZONTAL SCALE; 0 10' 20' VERTICAL SCALE

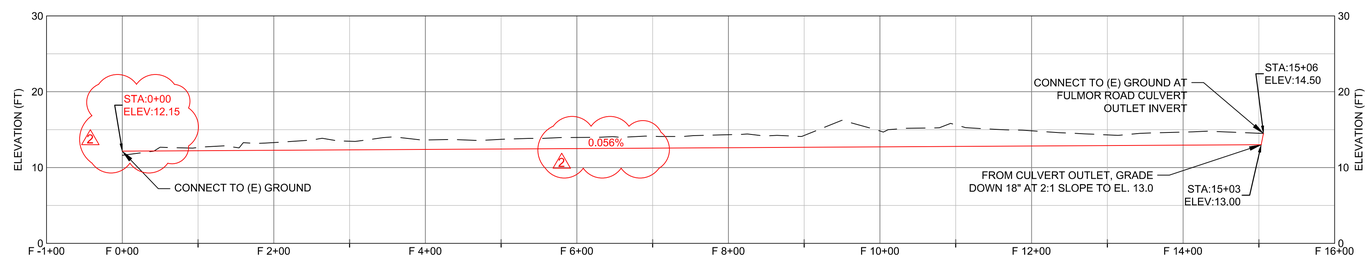

PROFILE: FULMOR ROAD CULVERT DRAINAGE SWALE

VERTICAL EX.: 10:1

SCALE: 0 100' 200' HORIZONTAL SCALE; 0 10' 20' VERTICAL SCALE

RECORD DRAWING

THESE RECORD DRAWINGS HAVE BEEN PREPARED, IN PART, ON THE BASIS OF INFORMATION COMPILED AND FURNISHED BY THE PROJECT CONTRACTOR AND OTHERS. THE ENGINEER WILL NOT BE RESPONSIBLE FOR ANY ERRORS OR OMISSIONS WHICH HAVE BEEN INCORPORATED INTO THIS DOCUMENT AS A RESULT. FIELD VERIFICATION OF FACTS AND DATA SHOULD BE MADE IF THESE DOCUMENTS ARE TO BE USED AS A BASIS FOR FUTURE WORK.

NOTE:
REFER TO HORZONTAL AND VERTICAL CONTROL S C-20 THROUGH C-22 FOR TABULATED ALIGNMENT AND PROFILE DATA.

GHD Inc.
718 Third Street Eureka California 95501 USA
T: 1 707 443 8326 F: 1 707 444 8330
W: www.ghd.com

REGISTERED PROFESSIONAL ENGINEER JEREMY SHANE SIEHL C 72169 CIVIL STATE OF CALIFORNIA

BAR IS ONE INCH ON ORIGINAL DRAWING 0 1"

REUSE OF DOCUMENTS
This document and the ideas and designs incorporated herein, as an instrument of professional service, is the property of GHD Inc. and shall not be reused in whole or in part for any other project without GHD Inc.'s written authorization. © GHD Inc. 2014

MARK	DATE	DESCRIPTION
2	2018/12/17	RECORD DRAWING REVISIONS
	06/30/2018	ISSUE FOR BID

ISSUE

HUMBOLDT COUNTY RESOURCE CONSERVATION DISTRICT
SALT RIVER ECOSYSTEM RESTORATION PROJECT

PROFILE
SALT RIVER

PROJ NO: 10653-8410410
DRWN: B. BYRD CHKD: JS/SA

C-12

SHEET 17 OF 53

TYPICAL STATIONARY
CONSTRUCTION AREA SIGN

CONSTRUCTION SIGN NOTES

1. EXACT SIGN LOCATIONS AND POSITIONS TO BE APPROVED BY THE CONSTRUCTION MANAGER.
2. ALL WARNING SIGNS SHALL HAVE A BLACK LEGEND AND BORDER ON ORANGE BACKGROUND PER CA MUTCD.
3. ALTERNATIVE POST CONFIGURATION TO BE APPROVED BY CONSTRUCTION MANAGER.
4. ALL SIGNS SHOWN ON THIS SHEET AND INSTALLED BY THE CONTRACTOR SHALL REMAIN IN PLACE AND BE COVERED BY THE CONTRACTOR AT THE END OF CONSTRUCTION TO THE SATISFACTION OF THE CONSTRUCTION MANAGER.

EXCAVATED SEDIMENT DELIVERY PERIOD

APPLICATION AREA	HAUL SEQUENCE	DELIVERY PERIOD	APPROX BASE BID DELIVERY VOLUME (CY)	APPROX ADDITIVE BID DELIVERY VOLUME (CY)
1	1	BY SEPTEMBER 1	6,000	-
2	2	BY SEPTEMBER 15	1,300	-
3	3	BY OCTOBER 15	8,995	870

2

SEE GHD AS-BUILT MEMO (DECEMBER 2018) FOR FINAL VOLUMES OBTAINED FROM HCRCD

RECORD DRAWING

2

THESE RECORD DRAWINGS HAVE BEEN PREPARED, IN PART, ON THE BASIS OF INFORMATION COMPILED AND FURNISHED BY THE PROJECT CONTRACTOR AND OTHERS. THE ENGINEER WILL NOT BE RESPONSIBLE FOR ANY ERRORS OR OMISSIONS WHICH HAVE BEEN INCORPORATED INTO THIS DOCUMENT AS A RESULT. FIELD VERIFICATION OF FACTS AND DATA SHOULD BE MADE IF THESE DOCUMENTS ARE TO BE USED AS A BASIS FOR FUTURE WORK.

STATIONARY MOUNTED CONSTRUCTION AREA SIGNS

SIGN LABEL	SIGN CODE	PANEL SIZE	SIGN MESSAGE	NUMBER & POST SIZE	NO. OF SIGNS	PLACEMENT
A	C44	36"x36"	TRUCKS ENTERING EXITING	(1) 4"x4"	6	100 FT FROM ENTRANCE

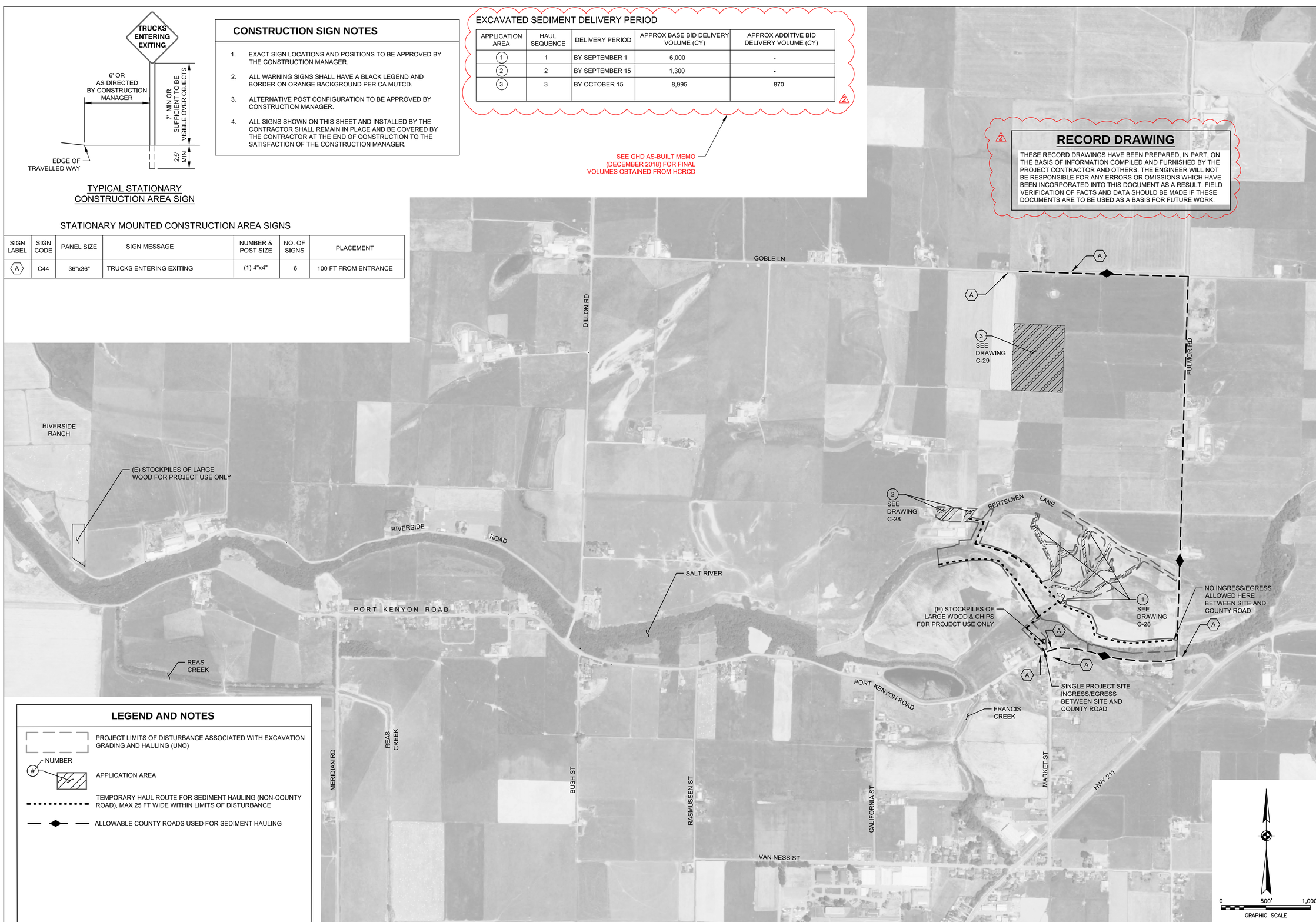

LEGEND AND NOTES

- PROJECT LIMITS OF DISTURBANCE ASSOCIATED WITH EXCAVATION GRADING AND HAULING (UNO)
- NUMBER
- APPLICATION AREA
- TEMPORARY HAUL ROUTE FOR SEDIMENT HAULING (NON-COUNTY ROAD), MAX 25 FT WIDE WITHIN LIMITS OF DISTURBANCE
- ALLOWABLE COUNTY ROADS USED FOR SEDIMENT HAULING

GHD Inc.
718 Third Street Eureka California 95501 USA
T 1 707 443 8326 F 1 707 444 8330
W www.ghd.com

REGISTERED PROFESSIONAL ENGINEER
JEREMY SHANE SYEHLA
C 72169
CIVIL
STATE OF CALIFORNIA

BAR IS ONE INCH ON ORIGINAL DRAWING
0 1"

REUSE OF DOCUMENTS
This document and the ideas and designs incorporated herein, as an instrument of professional service, is the property of GHD Inc. and shall not be reused in whole or in part for any other project without GHD Inc.'s written authorization. © GHD Inc. 2014

MARK	DATE	DESCRIPTION
2	2018/12/17	RECORD DRAWING REVISIONS
	06/30/2018	ISSUE FOR BID

ISSUE

HUMBOLDT COUNTY RESOURCE CONSERVATION DISTRICT

SALT RIVER ECOSYSTEM RESTORATION PROJECT

HAUL AND APPLICATION PLAN

PROJ NO: 10653-8410410

DRWN: B. BYRD CHKD: JS/SA

C-27

SHEET 32 OF 53

Plot Date: 17 December 2018 - 7:53 AM Plotted By: Brendan Byrd

Cad File No: G:\Legacy\Projects\10653 humcoresourceconservationdist\8410410 salt river final design\06-CAD\Sheets\1065310003_TRAFFIC MANAGEMENT PLAN.dwg

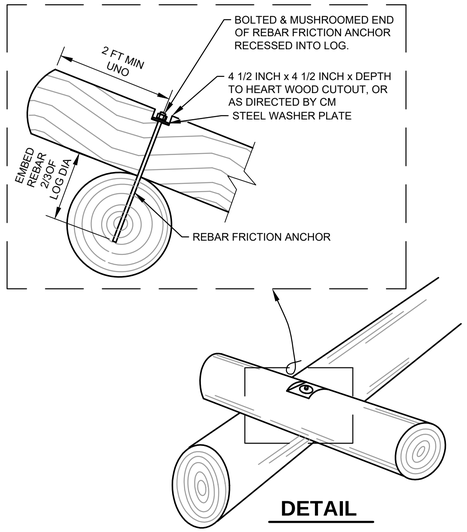

NOTE:
REBAR FRICTION ANCHOR LOCATIONS ARE DESIGNATED WITH THE SYMBOL ◉ WHERE APPLICABLE ON LOG STRUCTURE DETAILS.

10 TYPICAL REBAR FRICTION ANCHOR
NTS

RECORD DRAWING

THESE RECORD DRAWINGS HAVE BEEN PREPARED, IN PART, ON THE BASIS OF INFORMATION COMPILED AND FURNISHED BY THE PROJECT CONTRACTOR AND OTHERS. THE ENGINEER WILL NOT BE RESPONSIBLE FOR ANY ERRORS OR OMISSIONS WHICH HAVE BEEN INCORPORATED INTO THIS DOCUMENT AS A RESULT. FIELD VERIFICATION OF FACTS AND DATA SHOULD BE MADE IF THESE DOCUMENTS ARE TO BE USED AS A BASIS FOR FUTURE WORK.

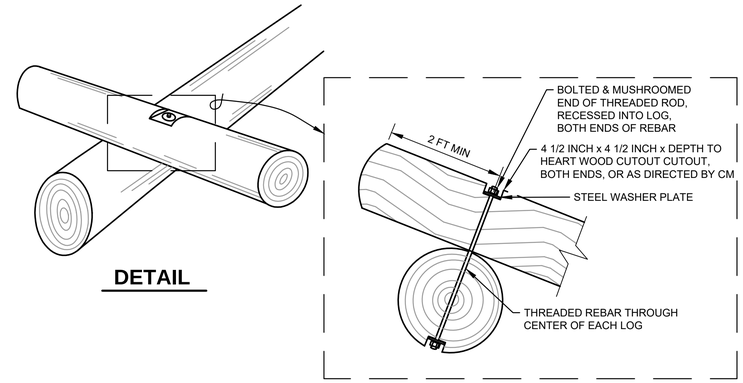

NOTE:
LOG TO LOG ANCHOR LOCATIONS ARE DESIGNATED WITH THE SYMBOL ⊡ WHERE APPLICABLE ON LOG STRUCTURE DETAILS.

11 TYPICAL LOG TO LOG ANCHORING
NTS

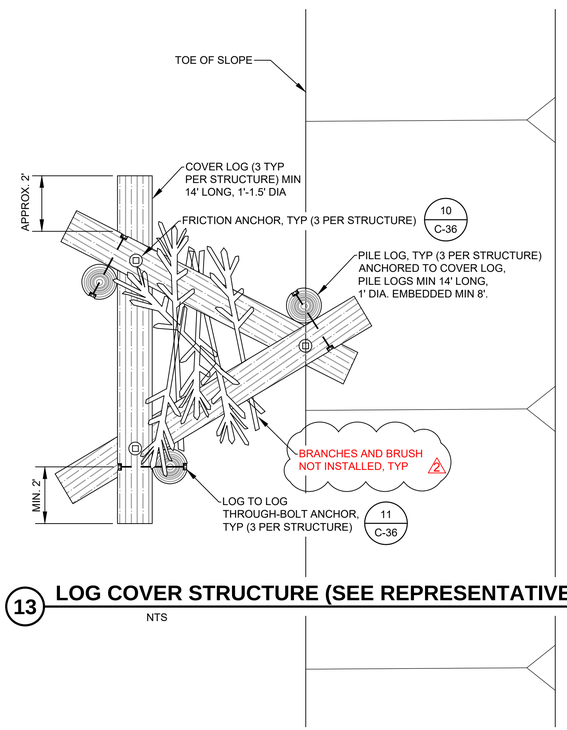

13 LOG COVER STRUCTURE (SEE REPRESENTATIVE PHOTO, THIS SHEET)
NTS

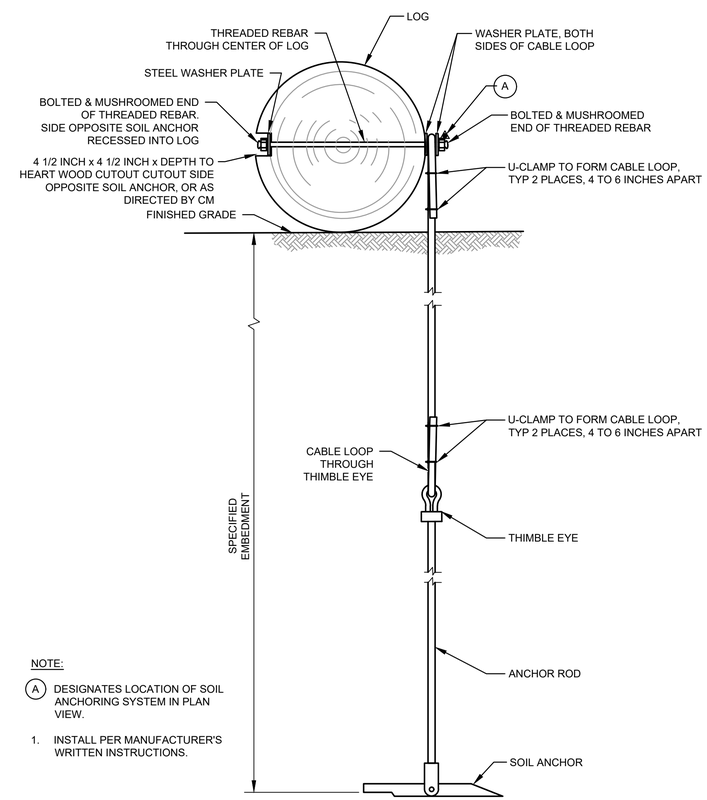

NOTE:

(A) DESIGNATES LOCATION OF SOIL ANCHORING SYSTEM IN PLAN VIEW.

1. INSTALL PER MANUFACTURER'S WRITTEN INSTRUCTIONS.

12 TYPICAL SOIL ANCHORING SYSTEM
NTS

GHD Inc.
718 Third Street Eureka California 95501 USA
T: 1 707 443 8326 F: 1 707 444 8330
W: www.ghd.com

REGISTERED PROFESSIONAL ENGINEER JEREMY SHANE SYEHLA C 72169 CIVIL STATE OF CALIFORNIA

BAR IS ONE INCH ON ORIGINAL DRAWING 0 1"

REUSE OF DOCUMENTS
This document and the ideas and designs incorporated herein, as an instrument of professional service, is the property of GHD Inc. and shall not be reused in whole or in part for any other project without GHD Inc.'s written authorization. © GHD Inc. 2014

MARK	DATE	DESCRIPTION
A	2018/12/17	RECORD DRAWING REVISIONS
	06/20/2018	ISSUE FOR BID

ISSUE

HUMBOLDT COUNTY RESOURCE CONSERVATION DISTRICT
SALT RIVER ECOSYSTEM RESTORATION PROJECT

LOG CONSTRICTOR & ANCHORING TYPICAL DETAILS 7 OF 16

PROJ NO: 10653-8410410
DRWN: B. BYRD CHKD: JS/SA

C-36

SHEET 41 OF 53

SECTION A: INTERCEPTOR SWALE SECTION

SCALE: NTS

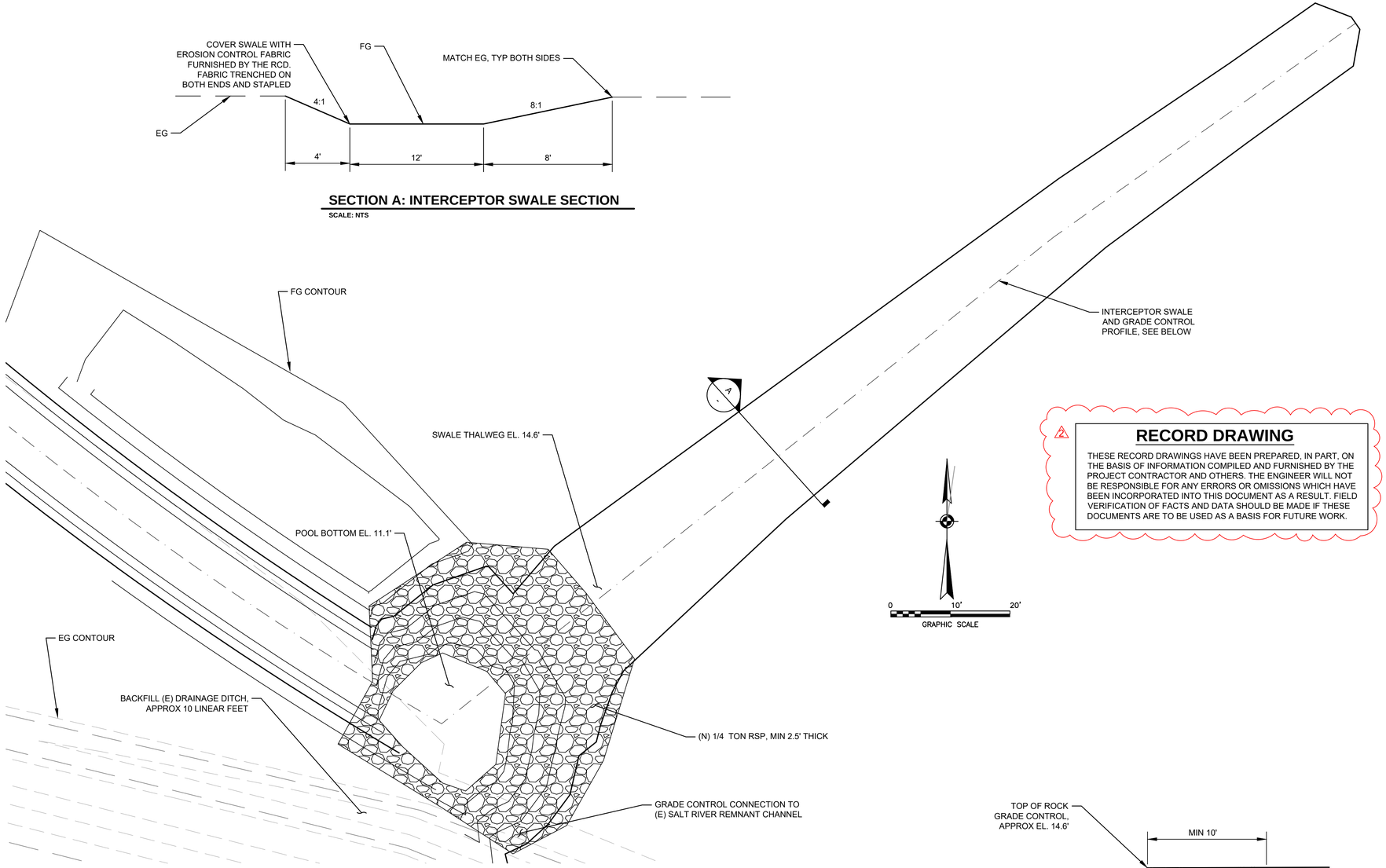

RECORD DRAWING

THESE RECORD DRAWINGS HAVE BEEN PREPARED, IN PART, ON THE BASIS OF INFORMATION COMPILED AND FURNISHED BY THE PROJECT CONTRACTOR AND OTHERS. THE ENGINEER WILL NOT BE RESPONSIBLE FOR ANY ERRORS OR OMISSIONS WHICH HAVE BEEN INCORPORATED INTO THIS DOCUMENT AS A RESULT. FIELD VERIFICATION OF FACTS AND DATA SHOULD BE MADE IF THESE DOCUMENTS ARE TO BE USED AS A BASIS FOR FUTURE WORK.

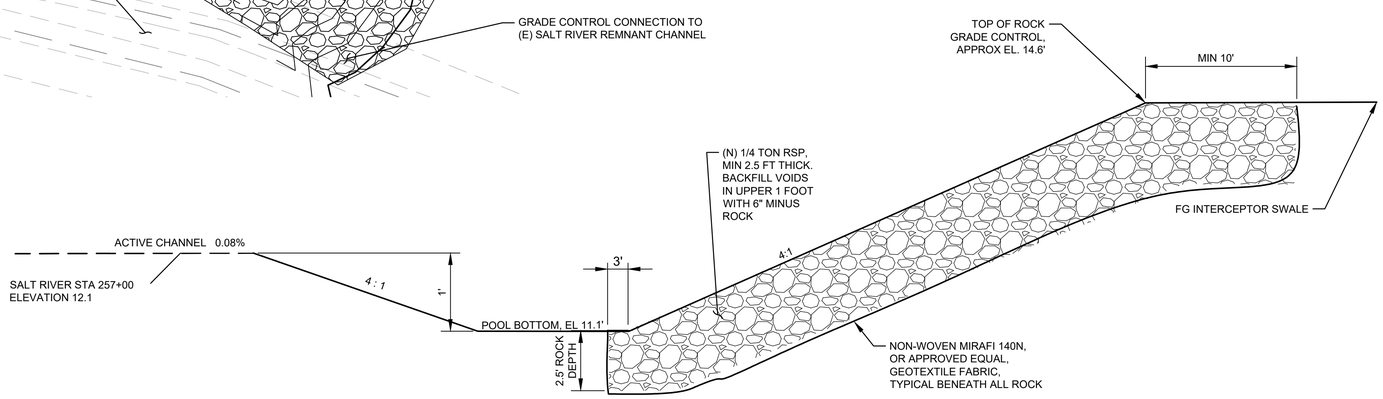

PROFILE DETAIL

SCALE: NTS

19 ROCK GRADE CONTROL

GHD Inc.
718 Third Street Eureka California 95501 USA
T: 1 707 443 8326 F: 1 707 444 8330
W: www.ghd.com

REGISTERED PROFESSIONAL ENGINEER
JEREMY SHANE SIEHL
No. C 72169
CIVIL
STATE OF CALIFORNIA

BAR IS ONE INCH ON ORIGINAL DRAWING
0 1"

REUSE OF DOCUMENTS
This document and the ideas and designs incorporated herein, as an instrument of professional service, is the property of GHD Inc. and shall not be reused in whole or in part for any other project without GHD Inc.'s written authorization. © GHD Inc. 2014

MARK	DATE	DESCRIPTION
2	2018 1227	RECORD DRAWING REVISIONS
	06/20/2018	ISSUE FOR BID

ISSUE

HUMBOLDT COUNTY RESOURCE CONSERVATION DISTRICT

SALT RIVER ECOSYSTEM RESTORATION PROJECT

MISCELLANEOUS TYPICAL DETAILS 11 OF 16

PROJ NO: 10653-8410410

DRWN: B. BYRD CHKD: JS/SA

C-40

SHEET 45 OF 53

RECORD DRAWING

THESE RECORD DRAWINGS HAVE BEEN PREPARED, IN PART, ON THE BASIS OF INFORMATION COMPILED AND FURNISHED BY THE PROJECT CONTRACTOR AND OTHERS. THE ENGINEER WILL NOT BE RESPONSIBLE FOR ANY ERRORS OR OMISSIONS WHICH HAVE BEEN INCORPORATED INTO THIS DOCUMENT AS A RESULT. FIELD VERIFICATION OF FACTS AND DATA SHOULD BE MADE IF THESE DOCUMENTS ARE TO BE USED AS A BASIS FOR FUTURE WORK.

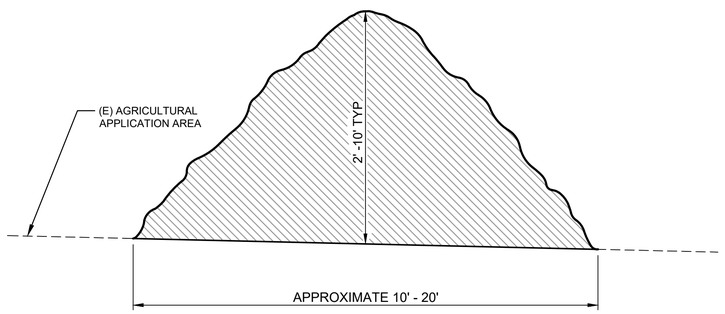

28 TYPICAL WINDROW SECTION

NTS

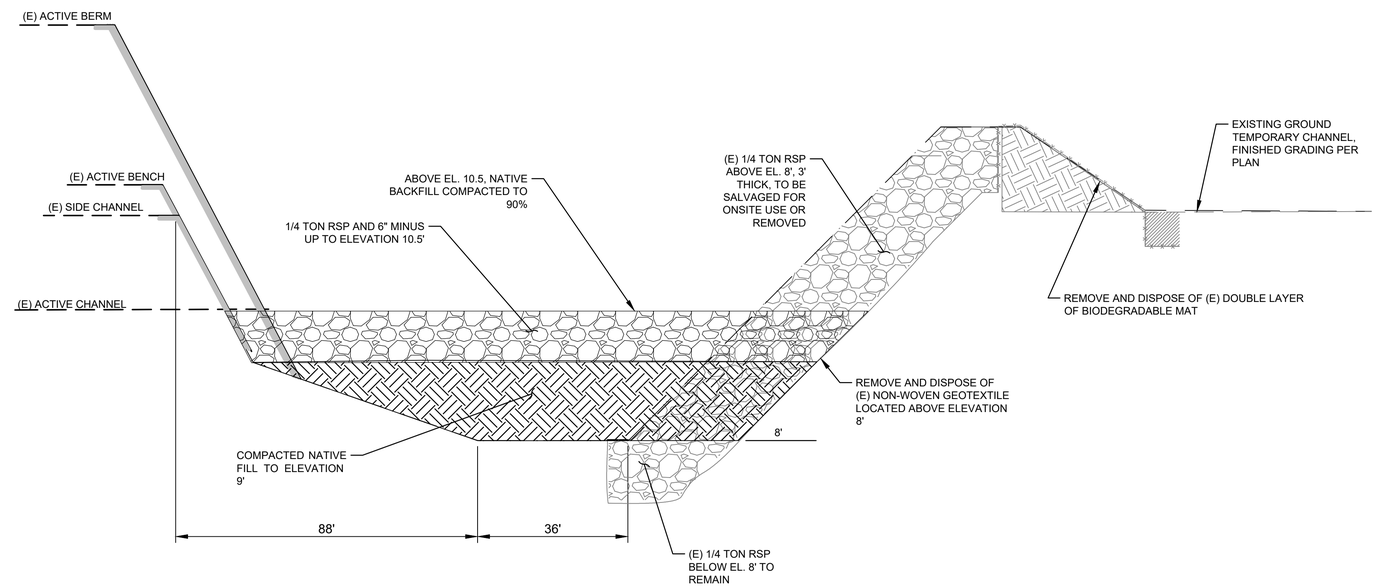

29 2017 GRADE CONTROL REMOVAL AND BACKFILL SECTION

GHD Inc.
718 Third Street Eureka California 95501 USA
T: 1 707 443 8326 F: 1 707 444 8330
W: www.ghd.com

REGISTERED PROFESSIONAL ENGINEER JEREMY SHANE SYEHLA C 72169 CIVIL STATE OF CALIFORNIA

BAR IS ONE INCH ON ORIGINAL DRAWING 0 1"

REUSE OF DOCUMENTS
This document and the ideas and designs incorporated herein, as an instrument of professional service, is the property of GHD Inc. and shall not be reused in whole or in part for any other project without GHD Inc.'s written authorization. © GHD Inc. 2014

MARK	DATE	DESCRIPTION
2	20181213	RECORD DRAWING REVISIONS
	06202018	ISSUE FOR BID
		ISSUE

HUMBOLDT COUNTY RESOURCE CONSERVATION DISTRICT

SALT RIVER ECOSYSTEM RESTORATION PROJECT

MISCELLANEOUS TYPICAL DETAILS 15 OF 16

PROJ NO: 10653-8410410

DRWN: B. BYRD CHKD: JS/SA

C-44

SHEET 49 OF 53

RECORD DRAWING

THESE RECORD DRAWINGS HAVE BEEN PREPARED, IN PART, ON THE BASIS OF INFORMATION COMPILED AND FURNISHED BY THE PROJECT CONTRACTOR AND OTHERS. THE ENGINEER WILL NOT BE RESPONSIBLE FOR ANY ERRORS OR OMISSIONS WHICH HAVE BEEN INCORPORATED INTO THIS DOCUMENT AS A RESULT. FIELD VERIFICATION OF FACTS AND DATA SHOULD BE MADE IF THESE DOCUMENTS ARE TO BE USED AS A BASIS FOR FUTURE WORK.

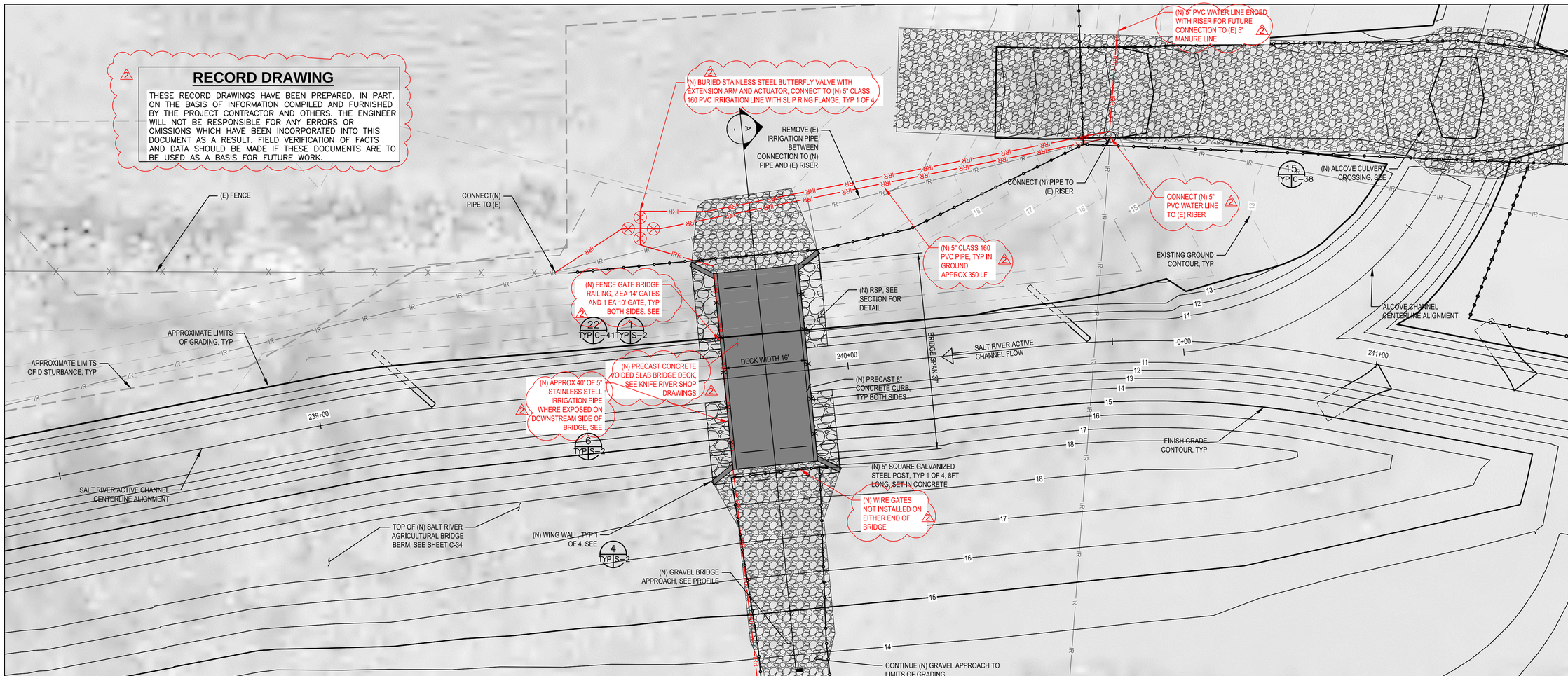

1 SALT RIVER AGRICULTURAL BRIDGE SITE PLAN

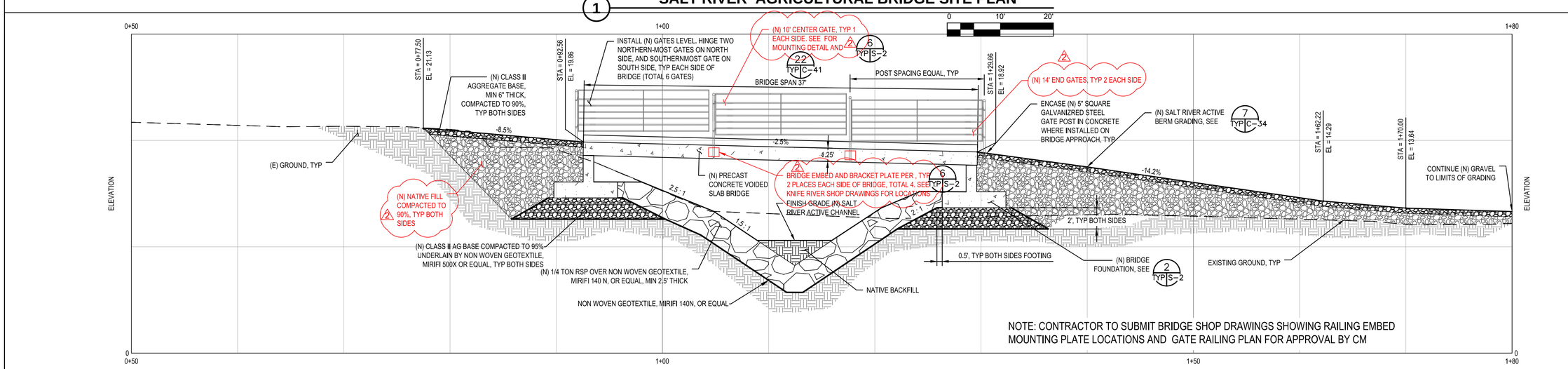

CROSS SECTION SALT RIVER AGRICULTURAL BRIDGE

0 5' 10'

GHD Inc.
718 Third Street Eureka California 95501 USA
T 1 707 443 8326 F 1 707 444 8330
W www.ghd.com

REGISTERED PROFESSIONAL ENGINEER JEREMY SHANE SYEHLA C 72169 CIVIL STATE OF CALIFORNIA

BAR IS ONE INCH ON ORIGINAL DRAWING
0 1"

REUSE OF DOCUMENTS
This document and the ideas and designs incorporated herein, as an instrument of professional service, is the property of GHD Inc. and shall not be reused in whole or in part for any other project without GHD Inc.'s written authorization. © GHD Inc. 2014

MARK	DATE	DESCRIPTION
2	2018/12/17	RECORD DRAWING REVISIONS
	06/20/2018	ISSUE FOR BID

ISSUE

HUMBOLDT COUNTY RESOURCE CONSERVATION DISTRICT
SALT RIVER ECOSYSTEM RESTORATION PROJECT

SALT RIVER AGRICULTURAL BRIDGE

PROJ NO: 10653-8410410
DRWN: B. BYRD CHKD: JS/SA

C-46

SHEET 51 OF 53

Plot Date: 17 December 2018 - 1:37 PM Plotted By: Brendan Byrd
Cad File No: G:\Legacy\Projects\10653 HumCoResourceConservationDist\8410410 Salt River Final Design\06-CAD\Sheets\1065310003_O6_Albin Bridge Site Plan.dwg

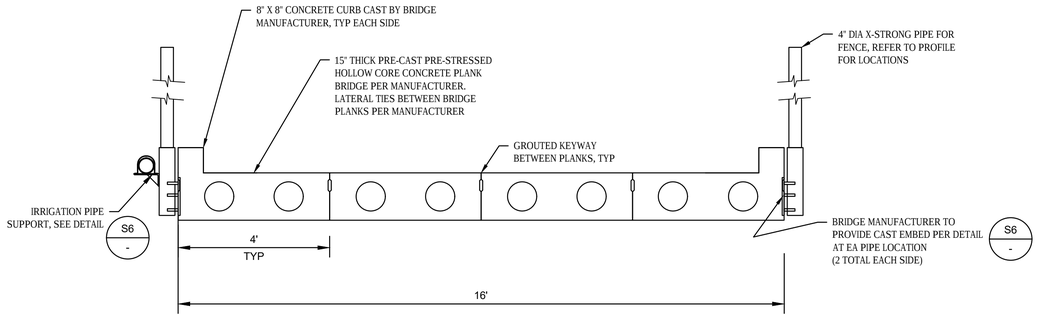

S1 TYP BRIDGE SECTION

SCALE 1/2"=1'-0" (0, 1', 2', 4')

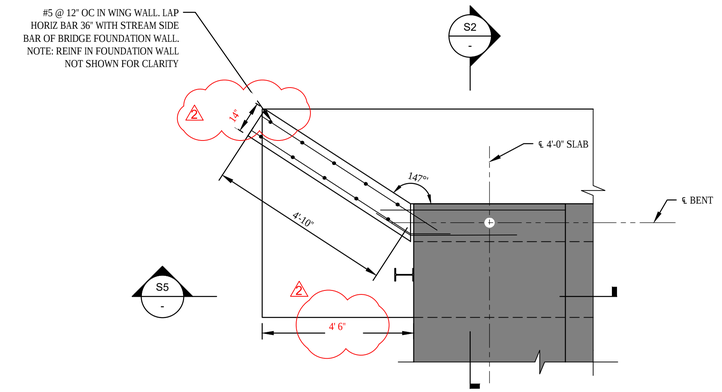

S4 PARTIAL BRIDGE FOUNDATION PLAN

SCALE 1/2"=1'-0" (0, 1', 2', 4')

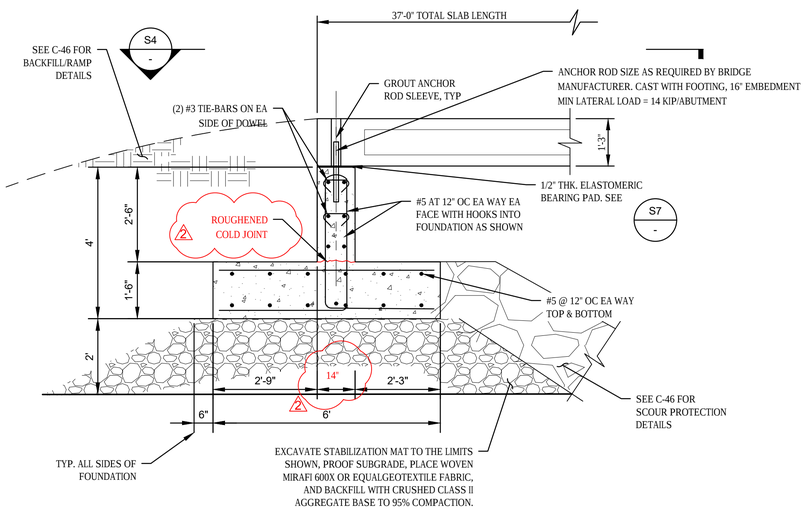

S2 TYP BRIDGE FOUNDATION SECTION

SCALE 1/2"=1'-0" (0, 1', 2', 4')

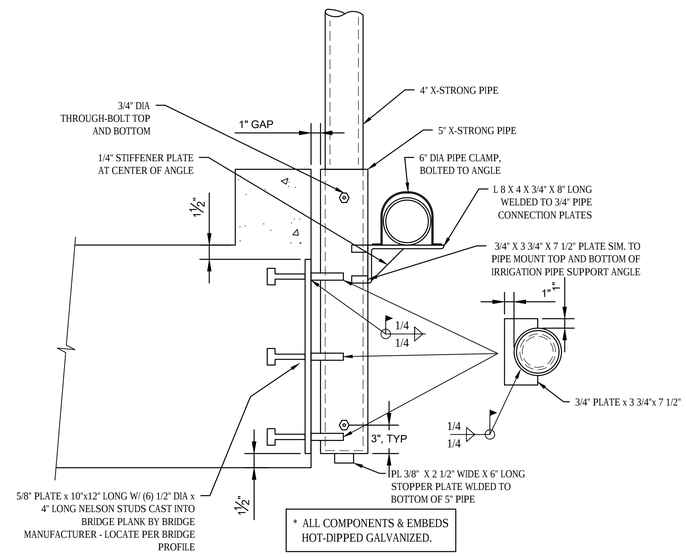

S6 EMBED AND BRACKET DETAIL

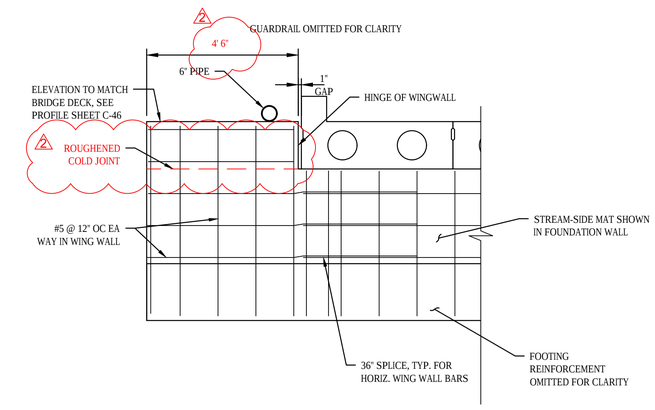

S5 TYP BRIDGE FOUNDATION ELEVATION AT WING WALL

SCALE 1/2"=1'-0" (0, 1', 2', 4')

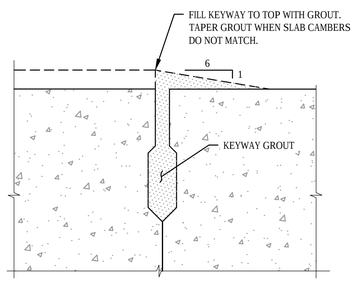

S3 KEYWAY GROUT DETAIL

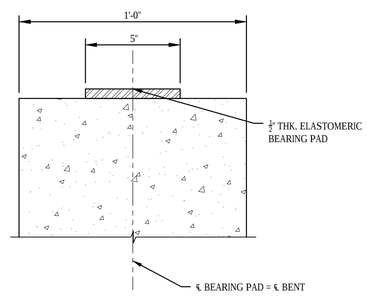

SECTION
SCALE: 3" = 1'-0"

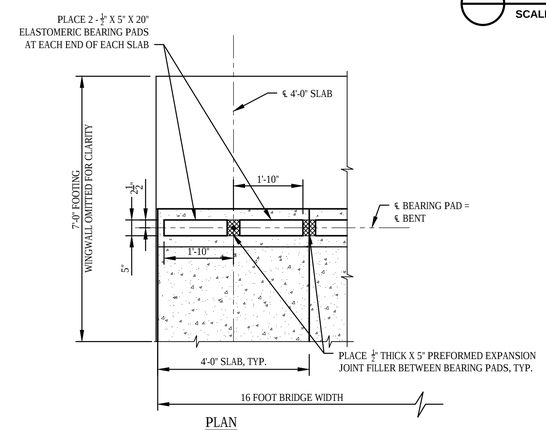

PLAN
SCALE: ½" = 1'-0"

S7 BEARING PAD DETAIL

2

RECORD DRAWING

THESE RECORD DRAWINGS HAVE BEEN PREPARED, IN PART, ON THE BASIS OF INFORMATION COMPILED AND FURNISHED BY THE PROJECT CONTRACTOR AND OTHERS. THE ENGINEER WILL NOT BE RESPONSIBLE FOR ANY ERRORS OR OMISSIONS WHICH HAVE BEEN INCORPORATED INTO THIS DOCUMENT AS A RESULT. FIELD VERIFICATION OF FACTS AND DATA SHOULD BE MADE IF THESE DOCUMENTS ARE TO BE USED AS A BASIS FOR FUTURE WORK.

GHD Inc.
718 Third Street Eureka California 95501 USA
T 1 707 443 8326 F 1 707 444 8330
W www.ghd.com

REGISTERED PROFESSIONAL ENGINEER JEFFREY L. CROWELL No. C 61191 STRUCTURAL STATE OF CALIFORNIA
Exp. 9/30/19

BAR IS ONE INCH ON ORIGINAL DRAWING
0 1"

REUSE OF DOCUMENTS
This document and the ideas and designs incorporated herein, as an instrument of professional service, is the property of GHD Inc. and shall not be reused in whole or in part for any other project without GHD Inc.'s written authorization. © GHD Inc. 2014

MARK	DATE	DESCRIPTION
2	2018/12/7	RECORD DRAWING REVISIONS
	06/20/2018	ISSUE FOR BID

ISSUE

HUMBOLDT COUNTY RESOURCE CONSERVATION DISTRICT

SALT RIVER ECOSYSTEM RESTORATION PROJECT

SALT RIVER AGRICULTURAL BRIDGE DETAILS

PROJ NO: 10653-8410410

DRWN: BB/SD CHKD: JS/SA

S-2

SHEET 53 OF 53

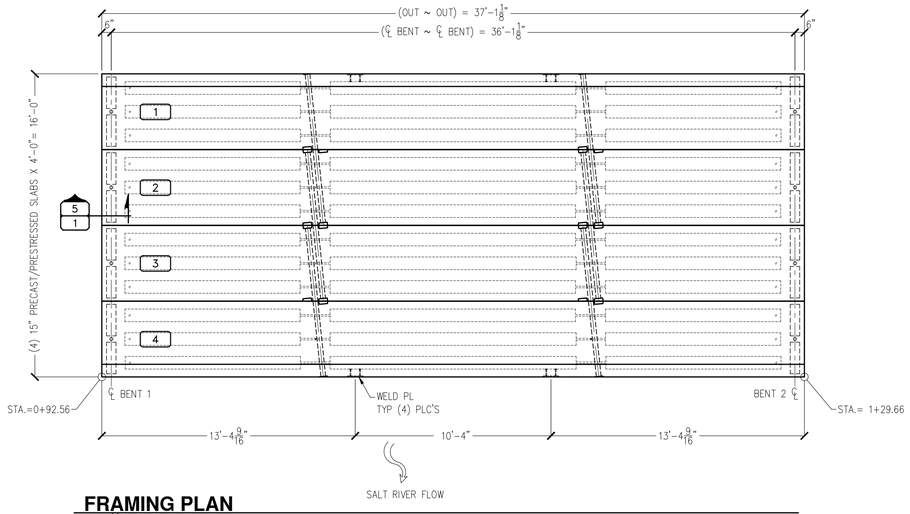

FRAMING PLAN

SCALE: 1/4"=1'-0"

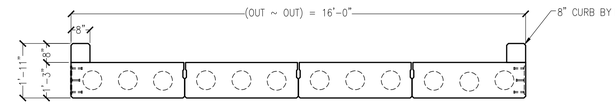

A/A BRIDGE SECTION

SCALE: 3/8"=1'-0"

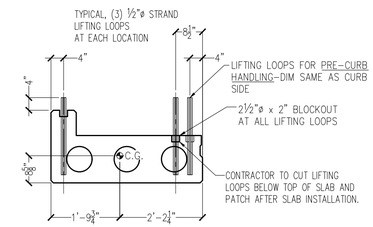

6/1 HANDLING DETAIL

SCALE: 1/2"=1'-0"

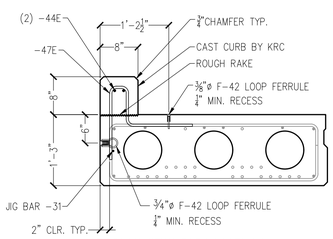

SEE PLAN VIEWS FOR LOCATIONS

3/1 CURB DETAIL

SCALE: 3/4"=1'-0" NOTE: SLAB [1] SHOWN, SLAB [4] IS MIRRORED.

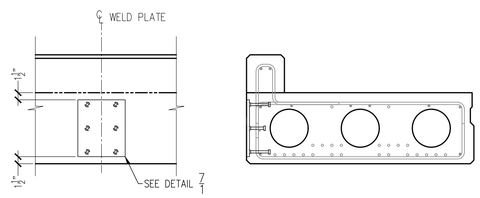

SEE PLAN VIEWS FOR LOCATIONS

4/1 WELD PL INSERT DETAIL

SCALE: 3/4"=1'-0" NOTE: SLAB [1] SHOWN, SLAB [4] IS MIRRORED.

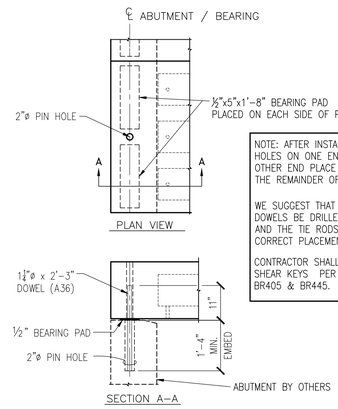

NOTE: AFTER INSTALLING THE 1 1/4"ø DOWELS, FILL THE HOLES ON ONE END WITH NON-SHRINK GROUT. AT THE OTHER END PLACE A CAP OVER THE DOWEL AND FILL THE REMAINDER OF THE HOLE WITH GROUT.

WE SUGGEST THAT THE "PIN HOLE" FOR THE 1 1/4"ø DOWELS BE DRILLED IN AFTER THE SLAB IS IN PLACE AND THE TIE RODS ARE INSTALLED. THIS ASSURES THE CORRECT PLACEMENT OF THE PINS.

CONTRACTOR SHALL TIGHTEN TIE RODS AND GROUT SHEAR KEYS PER ODOT STANDARD DRAWING NO. BR405 & BR445.

5/1 ABUTMENT / BEARING DETAIL

SCALE 1/2"=1'-0"

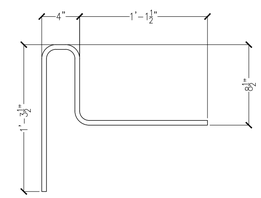

-47E/1 CURB BAR DETAIL

SCALE: 1 1/2"=1'-0"

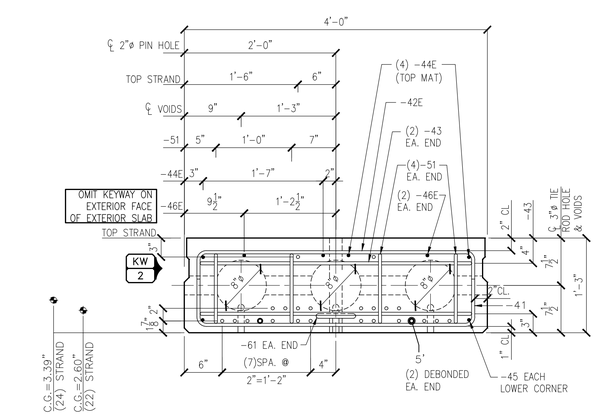

1/1 TYPICAL 15" SECTION & END REINFORCEMENT

SCALE 1" = 1'-0" ODOT SLAB NO. 7
(24) 1/2"ø 270 KSI LOW RELAXATION STRAND, PULL TO 31.0 KIP EACH
DETAILS SYMMETRICAL ABOUT ℄ OF SLAB UNLESS SHOWN OTHERWISE

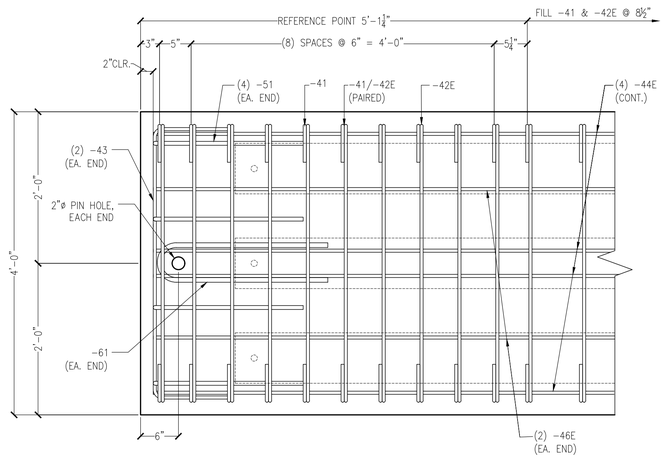

2/1 END PLAN

SCALE 1" = 1'-0"

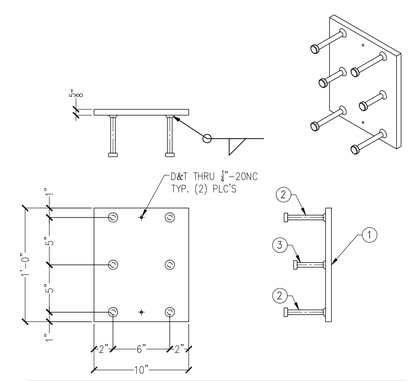

MATERIALS					
MK.	DESCRIPTION	QTY.	TOTAL	FINISH
1	PL 5/8"x 10"x 12" (A36)	1	4	SEE NOTE 1
2	H.C.A 1/4" DIA X 4" ASTM A29/A108	4	16	SEE NOTE 1
3	H.C.A 1/4" DIA X 3" ASTM A29/A108	2	8	SEE NOTE 1

7/1 WELD PL ANCHOR DETAIL

SCALE: 1 1/2"=1'-0"

1) HOT DIP GALVANIZE ASSEMBLY AFTER FABRICATION

DESIGN NOTES

1) DESIGN PER AASHTO LRFD BRIDGE DESIGN SPECIFICATIONS, 7TH EDITION WITH 2016 INTERIMS.
2) DESIGN FOR HL-93 LIVE LOAD WITH IMPACT.
3) RAIL = 50 PLF
4) SLABS AND DOWEL PIN DESIGNED FOR 14.0 KIPS APPLIED AT EACH ABUTMENT

NOTES

1) CONCRETE STRENGTH: @ TRANSFER: 5000 PSI; @ 28 DAYS: 6500 PSI
2) KNIFE RIVER MIX DESIGN: H71Y3
3) PRODUCT FINISH TOP: TRANSVERSE COARSE BROOM; EXTERIOR: SACK; OTHERS: FORM; CURB: ROUGH RAKE UNDER CURB
4) CONCRETE VOLUME : EXTERIOR: 5.6 CY; INTERIOR: 5.5 CY; CURB: 0.6 CY
5) WEIGHT : EXTERIOR w/ CURB: 25.9 KIPS; INTERIOR: 23.3 KIPS
6) LIFTING : (3) LIFTING LOOPS @ (4) OR (6) PICK POINTS
7) KNIFE RIVER INSPECTION: STERLING BIGGAR; OUTSIDE INSPECTION : NONE
8) THEORETICAL CAMBER: @ TRANSFER: 0.8"; @ 3 MONTHS: 1.4"
9) ALL REINFORCING STEEL EXCEPT PRESTRESS SHALL CONFORM TO REQUIREMENTS OF ASTM A615, OR A706 GRADE 60.
10) DO NOT SHIP UNTIL : 7 DAYS AFTER CASTING; 28 DAY CONCRETE COMPRESSIVE STRENGTH IS REACHED; 7 DAYS AFTER LAST REPAIR
11) HOLE AND INSERT TOLERANCE ±1" DUE TO CONFLICT W/ STRAND AND REBAR
12) BUY AMERICA ACT : DOES NOT APPLY

HANDLING

1) LIFTING : 0'-11" DISTANCE FROM EACH END
2) STORAGE : 1'-0" DISTANCE FROM EACH END
3) SHIPPING : 4'-0" DISTANCE FROM EACH END

MATERIALS

1) CONCRETE : 23.4 CY
2) STRAND : 3564 LF 3/8"ø 270 KSI LOW RELAXATION STRAND (ASTM A416)
3) VOIDS : 12 0'-8"ø X 13'-0"; 24 0'-8"ø X 9'-3"
4) WELD PL ANCHORS : 4 SEE DETAIL 7/1
5) INSERTS : 20 3/4"ø F-42 LOOP FERRULE (GALV.); 20 3/8"ø F-42 LOOP FERRULE (GALV.)

REINFORCEMENT SCHEDULE

MARK	SIZE	DESCRIPTION	ASTM	QTY EACH	QTY TOTAL
-31	#3	A=36'-9 1/2"	A615	1	2
-41	#4	4 1/2"; 1'-0"; 3'-8"	A615	59	236
-42E	#4	3'-8"; 4 1/2"; EPOXY	A615	59	236
-43	#4	3'-7"; 1'-0"	A615	4	16
-44E	#4	A=36'-9 1/2"; EPOXY	A615	SLABS 1 & 4: 6; SLABS 2 & 3: 4	20
-45	#4	A=36'-9 1/2"	A615	2	8
-46E	#4	A=10'-0"; EPOXY	A615	4	16
-47E	#4	SEE DETAIL -47E/1; EPOXY	A706	39	78
-51	#5	0'-11"; 2'-0"	A615	8	32
-61	#6	5 1/2"; 2'-3"	A706	2	8

CAGE WEIGHT	:	750	LBS
BLACK WEIGHT	:	1,520	LBS
EPOXY WEIGHT	:	1,480	LBS
REBAR TOTAL WEIGHT	:	3,000	LBS

CONTRACT MATERIALS

1) TIE RODS (EXTERIOR) 4 7/8"ø x 8'-4" (A449) w/ 4" THREADS (GALV.)
2) TIE RODS (INTERIOR) 2 7/8"ø x 8'-2" (A449) w/ 4" THREADS (GALV.)
3) TIE ROD NUT 12 7/8"ø HEAVY HEX NUT (A563, GALV.)
4) WASHER 12 7/8"ø HARD WASHER (F436, GALV.)
5) WASHER 6 7/8"ø DTI WASHER (F959,M GALV.)
6) WASHER 12 1"x 4 1/2"x 4 1/2" PL w/ 1"ø HOLE CTR'D (A36, GALV.)
7) BEARING PAD 16 1/2"x 5"x 20" MASTICORD BEARING PAD
8) DOWEL PINS 8 1 1/4"ø X 2'-3" DOWEL (A36)

NOTE: MATERIALS LISTED PER ODOT STANDARD BR405 & BR445

SHIP WITH FIRST TRUCK TO JOB SITE

PROJECT NAME

SALT RIVER AGRICULTURAL BRIDGE
SALT RIVER ECOSYSTEM RESTORATION
HUMBOLDT COUNTY
FERNDALE, CA

CONTRACTOR
MERCER-FRASER COMPANY
P.O.BOX 1006
EUREKA, CA 95502
PH: (707) 443-5371
FAX: (707) 443-0277
MARK BENZINGER
E-MAIL: mbenzinger@mercerfraser.com

INSPECTION
KNIFE RIVER PRESTRESS
23505 PEORIA RD.
HARRISBURG, OR 97466
PH: (541) 995-4100
FAX: (541) 995-9447
STERLING BIGGAR
E-MAIL: sterling.biggar@kniferiver.com

ENGINEER
GHD, INC
718 3RD STREET
EUREKA, CA 95501
PH: (707) 443-8326
FAX: (707) 444-8330
JEREMY S. SVEHLA
E-MAIL: jeremy.svehla@ghd.com

ENGINEER STAMP

KNIFE RIVER
AN MDU RESOURCES COMPANY
P.O. BOX 181
23505 PEORIA RD.
HARRISBURG, OREGON 97446
PH: (541) 995-4100
FAX: (541) 995-9447

DRAWING STATUS

APPROVED FOR CONSTRUCTION
08/22/2018
KNIFE RIVER PRESTRESS
HARRISBURG, OREGON

DATE	REVISION	BY

DRAWN: M. GIESSEN	DATE: 08/10/2018
HANDLING: D. CHAPMAN	DATE: 08/13/2018
CHECKED: D. CHAPMAN	DATE: 08/13/2018
APPROVED BY: JEREMY SVEHLA	DATE: 08/22/2018

PROJECT NO. 88555

PRODUCT TYPE: SLAB 15"

SHEET 1 OF 2

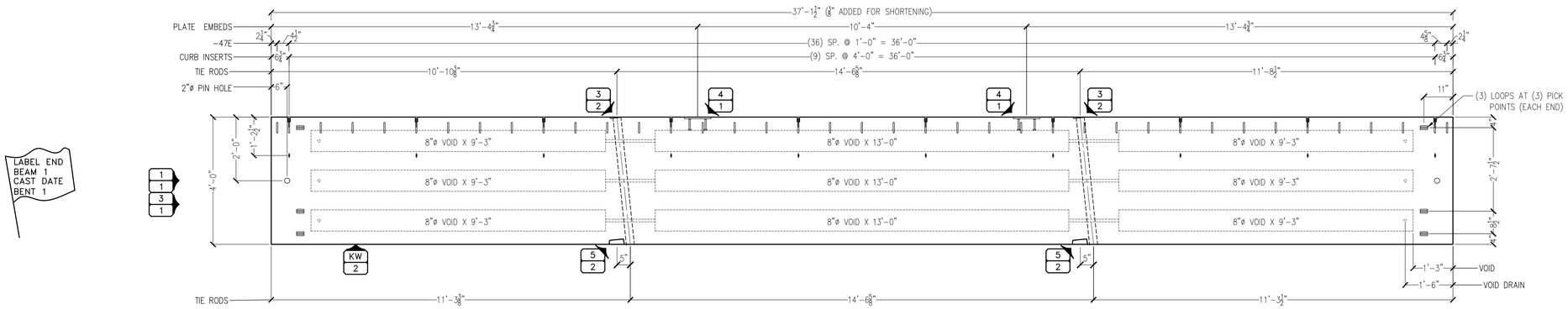

PLAN VIEW 1

SCALE: ½"=1'-0"

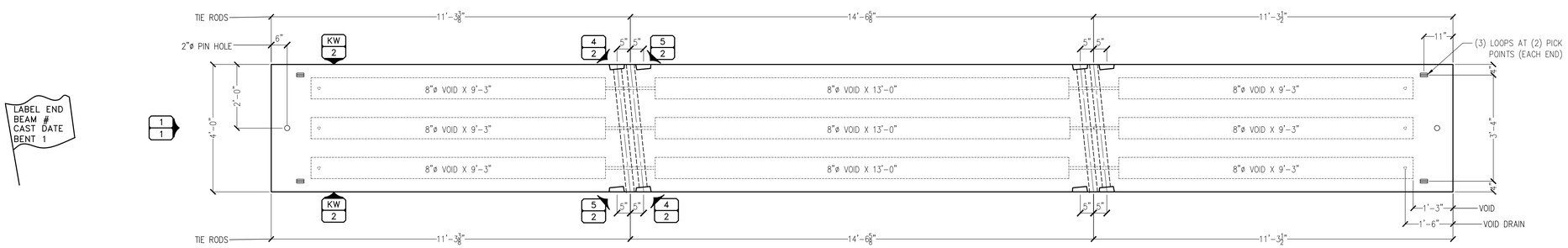

PLAN VIEW 2 3

SCALE: ½"=1'-0"

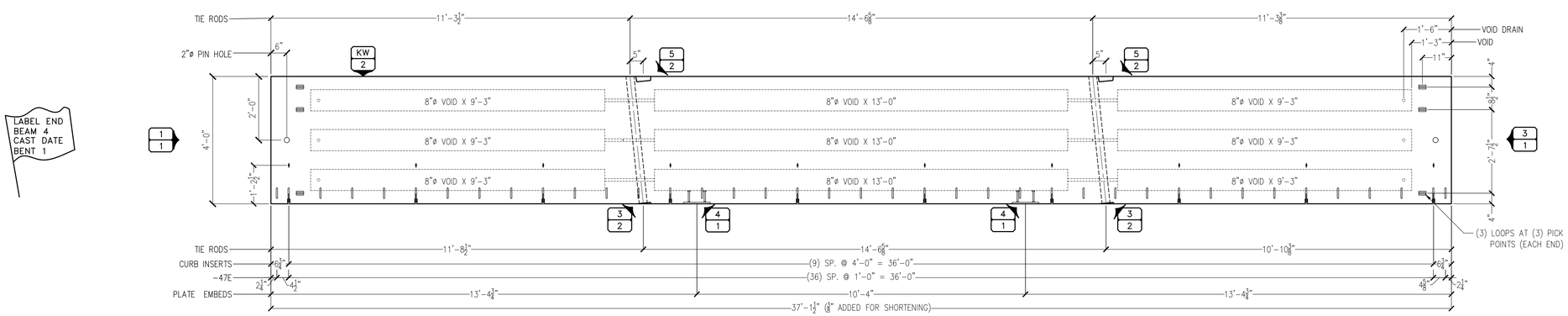

PLAN VIEW 4

SCALE: ½"=1'-0"

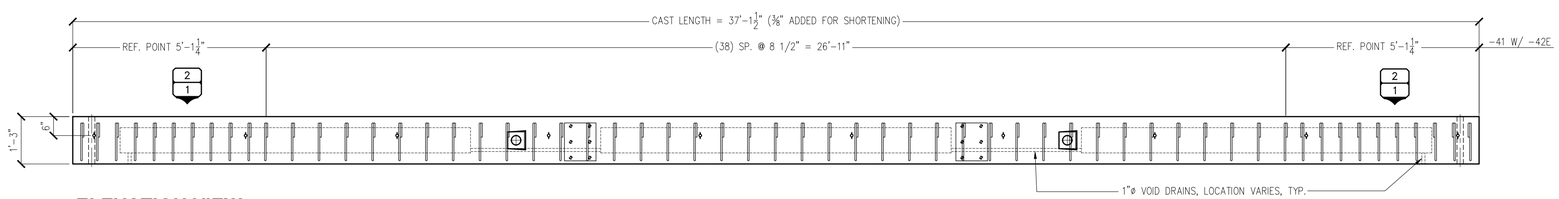

ELEVATION VIEW

SCALE: ½"=1'-0"

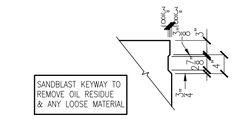

KEYWAY DETAIL (KW 2)

SCALE 3/4" = 1'-0"

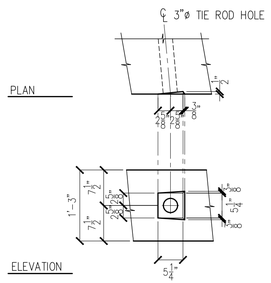

EXTERIOR RECESS (3 2)

SCALE 3/4" = 1'-0"

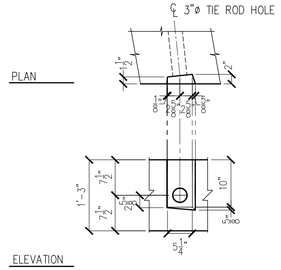

INTERIOR RECESS (4 2)

SCALE 3/4" = 1'-0"

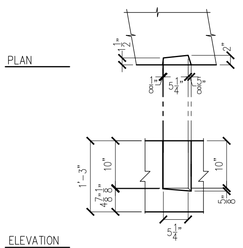

BLIND RECESS (5 2)

SCALE 3/4" = 1'-0"

PROJECT NAME

SALT RIVER AGRICULTURAL BRIDGE

SALT RIVER ECOSYSTEM RESTORATION
HUMBOLDT COUNTY
FERNDALE, CA

CONTRACTOR
MERCER-FRASER COMPANY
P.O.BOX 1006
EUREKA, CA 95502
PH: (707) 443-5371
FAX: (707) 443-0277
MARK BENZINGER
E-MAIL: mbenzinger@mercerfraser.com

INSPECTION
KNIFE RIVER PRESTRESS
23505 PEORIA RD.
HARRISBURG, OR 97466
PH: (541) 995-4100
FAX: (541) 995-9447
STERLING BIGGAR
E-MAIL: sterling.biggar@kniferiver.com

ENGINEER
GHD, INC
718 3RD STREET
EUREKA, CA 95501
PH: (707) 443-8326
FAX: (707) 444-8330
JEREMY S. SVEHLA
E-MAIL: jeremy.svehla@ghd.com

ENGINEER STAMP

KNIFE RIVER
AN MDU RESOURCES COMPANY
P.O. BOX 181
23505 PEORIA RD.
HARRISBURG, OREGON 97446
PH: (541) 995-4100
FAX: (541) 995-9447

DRAWING STATUS

APPROVED FOR CONSTRUCTION

08/22/2018

KNIFE RIVER PRESTRESS
HARRISBURG, OREGON

DATE	REVISION	BY

DRAWN M. GIESSEN	DATE 08/10/2018
HANDLING D. CHAPMAN	DATE 08/13/2018
CHECKED D. CHAPMAN	DATE 08/13/2018
APPROVED BY JEREMY SVEHLA	DATE 08/22/2018

PROJECT NO. 88555

PRODUCT TYPE SLAB 15"

SHEET 2 OF 2